Arboricultural Planning Statement
Solar Farm on Land South of Berrington

Date: March 2022

ADAS Reference: 1051610

Submitted to:

Econergy

International Ltd

Prepared by:

RSK ADAS Ltd

11D Park House

Milton Park

Abingdon

Oxfordshire

OX14 4RS

Tel. no: 01235 355635

MANAGEMENT SYSTEM CERTIFICATION

DNV·GL

ISO 9001 = ISO 14001

ISO 45001

Contents

© ADAS 2022

Appendices

© ADAS 2022

Quality Assurance

Author	Checked	Approved
Ryan Lloyd *PTI, L4 Dip Arb, TechArborA* Arboricultural Consultant	Iain Waddell *L6 Dip Arb (ABC)* Principal Arboricultural Consultant	Iain Waddell *L6 Dip Arb (ABC)* Principal Arboricultural Consultant

Disclaimer

RSK ADAS Ltd (ADAS) has prepared this report for the sole use of the client, showing reasonable skill and care, for the intended purposes as stated in the agreement under which this work was completed. The report may not be relied upon by any other party without the express agreement of the client and ADAS. No other warranty, expressed or implied, is made as to the professional advice included in this report.

Where any data supplied by the client or from other sources have been used, it has been assumed that the information is correct. No responsibility can be accepted by ADAS for inaccuracies in the data supplied by any other party. The conclusions and recommendations in this report are based on the assumption that all relevant information has been supplied by those bodies from whom it was requested.

No part of this report may be copied or duplicated without the express permission of ADAS and the party for whom it was prepared.

Where field investigations have been carried out, these have been restricted to a level of detail required to achieve the stated objectives of the work.

This work has been undertaken in accordance with the quality management system of RSK ADAS Ltd.

Version History

Version	Date	Amendment
-	March 2022	Initial Report
A	May 2022	Updated Red line Boundary and Layout Plan
B	August 2022	Updated Red line Boundary

© ADAS 2022

1 Executive Summary

Econergy International Ltd are proposing a new Solar Farm on Land South of Berrington, Shrewsbury, Shropshire, SY5 6HA, just under six miles from the centre of Shrewsbury. The proposals include the installation and operation of a renewable energy generating station comprising ground-mounted photovoltaic solar arrays together with substation, inverter/transformer units, site access, internal access tracks, security measures, access gates, other ancillary infrastructure and landscaping.

For the purposes of this report, reference to 'the site' means land encompassed by the red line shown on the Site Location Plan contained in **Appendix 1**.

Econergy International Ltd have commissioned ADAS to provide arboricultural advice in relation to the proposed development in line with the requirements of 'BS5837:2012 Trees in Relation to Design, Demolition and Construction: Recommendations' (BS5837:2012). This report has been prepared to comply with the requirements set out in Table B.1 of Annex B of BS5837:2012.

An ADAS Arboricultural Consultant carried out an initial arboricultural survey of the site on Wednesday 2nd February 2022 and a subsequent survey was undertake on Thursday 26th May 2022. The tree surveys collectively identified a total of 63 tree features which have the potential to be impacted by the development proposals, comprising 39 individual trees, 15 groups of trees, eight hedgerows and one woodland. In line with the recommendations contained within Table 1 of BS5837:2012 which is contained in **Appendix 2**, of these tree features, one was awarded a very low category U grade, 30 were awarded a low C grade, 18 were awarded a moderate B grade, and 14 were awarded a high category A grade.

Of the 63 tree features on site at the time of the survey, one low C grade group (G50) will require approximately 15 metres to be removed from the centre of the group in order to provide the required site access. One low C grade hedgerow (H24) will also require approximately 10 metres to be removed to enable an access gate to be installed for transition between the two fields.

A total of 11 veteran trees were surveyed either within or within 15 metres of the application site boundary. These were: T6, T7, T11, T20, T22, T28, T31, T42, T43, T44, T52. These trees are exceptionally valuable and one of their key attributes is the biodiversity value in which they provide and as such their RPA's were calculated at 15 x DBH, rather than the standard 12 x DBH.

A search of Shropshire Council's online mapping platform confirmed that the site is not situated within a Conservation Area, however it was unable to confirm the presence of any Tree Preservation Orders using this method. An email was sent to Shropshire Council on the 26th May 2022 requesting this information and an immediate reply was received confirming that there are no TPO's present within the site itself or within close proximity of the site.

In order to ensure the successful integration of retained trees into the proposed development, various tree protection measures will be incorporated into the design which are intended to maintain the trees in a safe and healthy condition. Further details of these are contained in **Section 5** of this report.

2 Introduction

2.1 The Author

This document has been produced by Ryan Lloyd, an ADAS Arboricultural Consultant. Ryan is a Technical Member of the Arboricultural Association, has a L4 Diploma in Arboriculture and is a qualified Professional Tree Inspector. Ryan has 7 years of experience within the arboricultural industry.

2.2 Client Instruction

This report was commissioned by Econergy International Ltd in January 2022 and is pertinent to the site known as Solar Farm on Land South of Berrington, Shrewsbury, Shropshire, SY5 6HA.

2.3 Purpose of Report

The purpose of this document is to provide reference and clarification on aspects of tree protection and any necessary tree management works for the proposed development. It is proposed to achieve this by setting out a methodology for all proposed works that may affect trees which are to be retained on and adjacent to site.

This document is also intended as a reference point for all site operatives and a copy will remain with the site manager for the duration of the development.

This document may be used as a point of reference if there were to be a dispute over compliance with related planning conditions.

2.4 Tree Survey Methodology

An initial tree survey, to establish the tree constraints on the site, was carried out by Ryan Lloyd on Wednesday 2nd February 2022 and a subsequent survey was undertaken on the 26th May 2022. Both tree survey were carried out in accordance with the recommendations contained within BS5837:2012 and can be found in **Appendix 3**.

All trees have been visually inspected from ground level unless otherwise stated, with no climbing or boring tests being undertaken. The comments made on their condition are based on observable factors present at the time of inspection.

The information, shown in **Table 1** below, was recorded as part of the tree surveys.

Table 1: Tree Survey Schedule heading descriptions

Column Heading	Description
Tree Ref No.	All individual trees and groups of trees have been given a unique reference number. Each number is prefixed by a letter. ▪ T = Individual tree ▪ G = Group of trees ▪ H = Hedgerow ▪ W = Woodland
Species	The English common name has been used, with the scientific name in brackets.
Single or Multiple stem (S or M)	▪ 'S' represents a tree which has a single clear stem to at least 1.5m above ground level. ▪ 'M(a)' represents a tree where the main stem divides into two to five stems below 1.5m above ground level, and ▪ 'M(b)' represents a tree where the main stem divides into 6 or more stems below a height of 1.5m.
Height (m)	Where possible tree heights are measured using a laser. In some instances such as in close groups of trees, one height may be measured and other nearby trees estimated from this height. Measurements are provided in metres.
Stem Diameter (mm)	S_n represents the stem number. Measurements are provided in millimetres at 1.5m above ground level for single stemmed trees.
Branch Spread (m)	Measured in metres to the four cardinal compass points (N, E, S, W).
Crown Clearance	(1) Height in metres of the first significant branch, and the direction of growth. (2) Height in metres of lowest part of crown.
Life Stage	The stage at which the tree is within its lifecycle (Y = young, SM = semi-mature, EM = early-mature, M = mature, OM = over mature, V = veteran)
General Observations	Any relevant observations are recorded, with particular reference to structural and/or physiological condition.
Preliminary Management Recommendations	Recommendations are made where management work is required for reasons of health and safety or sound arboricultural management.
Estimated Remaining Contribution (years)	An estimation of how long the feature will contribute to its surroundings. This is recorded in bands of either <10 years, 10+ years, 20+ years and 40+ years.
Tree Quality Grading	The trees are graded to the categories prescribed within BS5837:2012 (U, A, B & C).
Root Protection Area (RPA)	Calculated as prescribed in section 4.6 of BS5837:2012, provided as an area (m^2) and a radius from the tree's stem (m).
Note: Those measurements shown in *italics* have been estimated, usually where access has restricted it being taken.	

2.5 Assumptions and Limitations

The Tree Constraints Plan (TCP) contained in **Appendix 4** has been developed from the tree survey information and the topographical survey (drawing reference: PLS-1025-Econergytech – Berrington – Topographical Survey 2D)

This report assumes that the proposed design layout demonstrated on the Tree Protection Plan (TPP) contained in **Appendix 5** is the final layout.

This report is only intended for use by the person(s) or company named on the front cover.

This report is not a full hazard or risk assessment of trees and should not be used as such.

Trees are living organisms and are constantly adapting to their ever-changing environment. No tree is completely safe and there is no guarantee that problems or deficiencies may not arise in the future, which have not been identified in this report. Therefore, this report is only valid for a period of 1 year from the date of the initial site inspection.

2.6 Tree Preservation Orders and Conservation Areas

Local Planning Authorities (LPAs) have the power to preserve selected trees and woodlands through the making of Tree Preservation Orders (TPOs). Similarly, special provision is provided to trees located within Conservation Areas (CAs) which are not the subject of a TPO. The LPAs powers to do this are provided by the following Act of Parliament and its associated regulations:

- Town and Country Planning Act 1990
- Town and Country Planning (Determination of Appeals by Appointed Persons) (Prescribed Classes) (Amendment) (England) Regulations 2008
- Town and Country Planning (Trees) (Amendment) (England) Regulations 2012

The principal effect of a TPO is to prohibit the cutting down, uprooting, topping, lopping, wilful damage or wilful destruction of trees without first obtaining the consent of the relevant Local Authority.

Where works to trees within a CA are proposed, six weeks notification must first be given to the relevant Local Authority.

Unauthorised works to trees either protected by a TPO or those that are located within a CA, could result in an unlimited fine for each tree.

A search of Shropshire Council's online mapping platform confirmed that the site is not situated within a Conservation Area, however it was unable to confirm the presence of any Tree Preservation Orders using this method. An email was sent to Shropshire Council on the 26th May 2022 requesting this information and an immediate reply was received confirming that there are no TPO's present within the site itself or within close proximity of the site.

2.7 Wildlife Legislation

The following Acts and Regulations are the main pieces of legislation that protect wildlife and habitats in England and Wales:

- Wildlife and Countryside Act 1981 (as amended)
- Conservation of Habitats and Species Regulations 2017 (as amended)
- Protection of Badgers Act 1992
- The Hedgerows Regulations 1997
- Countryside and Rights of Way Act 2000
- Natural Environment and Rural Communities Act 2006 & Environment (Wales) Act 2016

The Wildlife and Countryside Act 1981 provides statutory protection to wild birds, their nests (whether in use or being built), as well as other wild animals such as bats and their roosts. Under the Act it is a criminal offence to intentionally destroy any wild bird, its nest or eggs, or to harm any bat, damage or block access to its roost (even if it is not occupied at the time), or to disturb a bat whilst it is occupying a roost. For some birds listed in Schedule 1 of the Act, such as barn owl, it is also an offence to disturb them while they are nesting, building a nest, in or near a nest that contains their young, or to disturb their dependent young. Other wild animals afforded full legal protection under the Act and which may be affected by tree works include: otters and their places of shelter (often in exposed tree roots along river banks), hazel dormice, their breeding sites and resting places (well-structured woodland and scrub), and red squirrels and their nests (dreys). The Conservation of Habitats and Species Regulations 2017 provide additional legal protection to some species, including bats (all species), otters and hazel dormice. Badgers and their setts are specifically protected under the Protection of Badgers Act 1992, which makes it an offence to damage or block a sett, or to disturb badgers whilst they are using a sett. Where works might result in an offence being committed, advice will be required from a suitably experienced ecologist before they can be undertaken. For example, it may be necessary to programme tree work outside of the bird nesting period, typically March to August inclusive, or for an ecologist to undertake prior visual inspections of trees for nests and / or bat roosts.

Under the Wildlife and Countryside Act 1981 it is also illegal to plant or otherwise cause to grow in the wild certain invasive non-native plant species, including Japanese Knotweed, Himalayan Balsam, Giant Hogweed and Rhododendron. Any works that might cause the spread of these species could therefore result in an offence being committed. This might occur as a result of the incidental transportation of soil containing seeds or live root and stem fragments on the wheels of vehicles, or on the boots of personnel.

Special Areas of Conservation (SACs) and Special Protection Areas (SPAs) are strictly protected sites designated respectively under the EC Habitats Directive and the EC Birds Directive. In England and Wales,

SACs and SPAs are given legal protection by The Conservation of Habitats and Species Regulations 2017, which transpose the EC Habitats Directive and EC Birds Directive into national law. The Regulations ensure that any plan or project that may damage an SAC or SPA can only proceed if certain strict conditions are met.

Sites of Special Scientific Interest (SSSIs) are areas notified under the Wildlife and Countryside Act 1981 as being of special interest for nature conservation or their geology with additional protection afforded to them by the Countryside and Rights of Way Act 2000. Under the legislation Natural England (NE) or Natural Resources Wales (NRW) must be notified of any planned works or operations that could potentially damage an SSSI or its features of interest before they are able to proceed.

The Natural Environment and Rural Communities Act 2006 and Environment (Wales) Act 2016 place a statutory duty on public authorities (public bodies and utility companies) to 'seek to maintain and enhance biodiversity' so far as it is consistent with the proper exercise of their functions.

The above provides only a brief summary of the legislation. It is advised that the original text of the relevant legislation is consulted for the exact wording. If necessary, advice should be sought from a suitably qualified ecologist prior to any tree works being undertaken.

2.8 Site Description

The site comprises agricultural open fields bordered by hedges and trees, located south west of Berrington Village and just under six miles from the centre of Shrewsbury. The site is positioned at an elevated level and tree cover to the centre of the site is fairly minimal, though a small number of important Oak trees are present.

A brief desktop study using the British Geological Survey's website 'Geology of Britain Viewer' has revealed that the dominant soil type in this area is unlikely to have a high clay content with the bedrock being Salop Formation. It is however advised that a more detailed assessment is carried out to fully assess the soil type and if the soil is found to exhibit shrinkable characteristics, then careful consideration should be given to the design of any buildings and foundations within close proximity to trees.

3 Tree Survey Results and Impact Assessment

3.1 Survey Results

A total of 39 individual trees, 15 groups of trees, eight hedgerows and one woodland were surveyed on the 2nd February 2022 and 26th May 2022.

Of these, a total of 14 were high grade A category, 18 were moderate grade B category, 30 were low grade C category and one group was graded as a very low quality U category.

3.2 Veteran Trees

A total of 11 veteran trees were surveyed either within or within 15 metres of the application site boundary. These were: T6, T7, T11, T20, T22, T28, T31, T42, T43, T44, T52. These trees are exceptionally valuable and one of their key attributes is the biodiversity value in which they provide and as such their RPA's were calculated at 15 x DBH, rather than the standard 12 x DBH. The Recognition of Ancient, Veteran and Notable Trees (RAVEN) assessment for these trees can be found within the Tree Survey Schedule contained in **Appendix 3** of this report.

3.3 Impact Assessment

The proposals have been overlaid onto the Tree Constraints Plan and a Tree Protection Plan has been provided in **Appendix 5**. The impact the proposals are likely to have on the existing trees has been assessed under the following categories, and the findings are summarised in **Table 2**.

- Tree features proposed for partial removal as they are in conflict with the proposals
- Retained trees which are unaffected by the development proposals

Table 2: Arboricultural Implications Assessment

Impact	Reason	Tree Quality Assessment Category Grading*				Totals
		A	B	C	U	
Groups, and hedges to be partially removed	Located at proposed site accesses	None	None	H24 (approx. 10 metres) G50 (approx. 15 metres from centre of group)	None	**2**
Retained trees, groups, woodland and hedges which are unaffected by the development	Outside of, or sufficient distance from proposed area to be developed	T6, T7, T8, T11, T20, T22, T28, T31, T34, T35, T39, T42, T43, T44, T52	T1, T2, T3, T12, T14, T15, T21, T23, T27, G29, T33, T36, T37, G46, T47, W49, T58	T4, G5, G9, H10, G13, T16, T17, T18, T19, T25, H26, H32, G38, H40, G41, G45, T48, G50, G51, G53, H54, G55, H56, T57, G59, T60, H61, G63, T63	G30	**61**
					Total	**63**

4 Preliminary Tree Work

4.1 Tree Retention and Removal

To accommodate the proposed development as shown on the proposed layout plan (Drawing Ref: External_R2_Typ-2_Berrington Solar Project_Turning angle_55 Deg_Pitch_4.88m_R-R_2.5m_Capacity_28.254MWp), two tree features will require partial removal, a 15 metre section of G50 will need to be removed, along with a 10 metre section of H24. Both of these are due to a conflict with a proposed permanent access into and around the site.

The partial loss of these features is unlikely to have any significant adverse impact due to their low quality grading and any loss of amenity provision would be easily compensated for.

4.2 Tree Work Schedule

A schedule of tree work has been provided within **Appendix 6**. All tree work will be carried out prior to commencement of construction activities and prior to the erection of the tree protection measures.

4.2.1 Standard of Tree Work

All tree work and felling operations will be carried out in accordance with BS3998:2010 'Recommendations for Tree Work'; current arboricultural industry guidelines and best practice; and all relevant Health & Safety standards. Tree work is a specialist task that requires operatives to be appropriately qualified, skilled, and adequately insured. Guidance on selecting an appropriate contractor can be obtained from the Arboricultural Association, who also maintains a directory of Approved Contractors. The Arboricultural Association can be contacted on 01242 522152 or via their website http://www.trees.org.uk.

4.2.2 Wildlife Constraints

As mentioned in **section 2.7** of this report, all tree work operations must comply with The Wildlife and Countryside Act 1981 as amended by the Countryside and Rights of Way Act 2000, which provide statutory protection to birds, bats and other species, all of which could inhabit trees. Where works may constitute an offence, advice will be acquired from a suitably qualified person before works are able to proceed. For example, it may be necessary to programme tree work outside of the main bird nesting period, typically March through to August inclusive.

4.2.3 Modification to Tree Work Schedule

Should the recommended work schedule require modification, for whatever reason, this will be agreed with the appointed Arboricultural Consultant (when applicable) and approved in writing by Shropshire Council. Under no circumstances will the appointed contractor deviate from the Tree Work Schedule contained in **Appendix 6**, unless approved in writing by Shropshire Council.

5 Tree Protection Measures

5.1 Overview

Although these methodologies set out the precautions to be followed in order to ensure the retained trees are protected, the final responsibility for their installation lies with the site supervisor who must ensure that all current legislation and best practice is followed and that they are installed in a safe manner.

5.2 Construction Exclusion Zone (CEZ)

The CEZ is defined around the retained trees by the tree protection barriers shown by an orange line on the TPP and the security fencing shown by the black line. Where possible the CEZ is positioned to protect both the crowns and the Root Protection Areas (RPAs) of the retained trees. Guidance on RPAs is contained in **Appendix 7**.

5.3 Barriers

In line with Section 6.2.2 of BS 5837:2012, which requires that the tree protection barriers be fit for the purpose of excluding construction activity and that they provide adequate protection to the trees and hedges. It is proposed that the construction security fence as specified on the proposal plan (Drawing Ref: External_R2_Typ-2_Berrington Solar Project_Turning angle_55 Deg_Pitch_4.88m_R-R_2.5m_Capacity_28.254MWp) will act as the tree protection fence for the majority of the trees surveyed. The site security fence will be constructed and fully installed before the main solar construction phase is implemented.

In some areas, additional tree protection fencing will be required and is indicated on the TPP with an orange line, for example around T6, T7, T11, T12, G13 and T14 and T43 as these are located in the centre of the site and around T34, T39, T44, T57 and T58 as their RPA's encroach into the site.

In order for fencing to be considered suitable for tree protection, it must consist of 2m tall welded mesh panels supported on scaffold poles driven into the ground. Each panel will be secured to its neighbour with a minimum of 2 anti-tamper couplers secured so that they can only be undone from inside the CEZ. The panels will be further supported by stabiliser struts which will be pinned to the ground. An example of this type of barrier is contained in **Appendix 8**. The location of the tree protection barriers is provided on the TPP contained in **Appendix 5**. Their precise location and construction will be agreed on site between the appointed arboricultural consultant and Shropshire Council before any site works commence.

Inside the CEZ the following prohibitions will be complied with:

- No excavations, including by hand; unless approved by Shropshire Council;
- No storage of machinery;
- No storage or handling of building materials, fuel, chemicals or spoil;
- No fires;
- No vehicular access;
- No pedestrian access; unless approved by Shropshire Council;
- No alteration, increase or decrease, to existing ground levels; unless approved by Shropshire Council;
- No excavation or installation of services; unless approved by Shropshire Council.

In order to ensure that the CEZ remains intact, the tree protection barriers will not be moved or temporarily dismantled except in the situations previously mentioned.

To enable site operatives to appreciate the purpose of the protective fencing and reduce the risk of operatives attempting to move them, all-weather notices will be erected on the barriers similar to the example in **Appendix 9**. The barriers will only be adjusted or removed if prior written approval is obtained from Shropshire Council.

5.4 Utility Connections

At the time of producing this report ADAS have not been made aware of the locations of any other underground utility connections. However, in order to avoid damage to any of the retained trees, the following services will avoid the RPAs:

- Foul and surface water drains
- Land drains
- Soakaways
- Gas
- Oil
- Electricity
- Telephone
- Lighting
- Signage

If additional services must unavoidably be installed within the RPAs around retained trees, the locations of these will be chosen in consultation with the retained Arboricultural Consultant and will be agreed in writing with Shropshire Council. The works will be carried out using trenchless techniques such as moling, laser guided boring and/or in accordance with advice contained within National Joint Utilities Group 'Guidelines for the Planning, Installation and Maintenance of Utility Apparatus in Proximity to Trees, Volume 4' (NJUG 4).

5.5 Arboricultural Input

5.5.1 Sequence of Events

The sequence of events taken from the flow diagram within Figure 1 of BS5837:2012 has been provided in **Appendix 10**. This is to demonstrate the key timings for arboricultural input on a development site once planning permission has been approved.

5.5.2 Site Monitoring

The developer should appoint an Arboricultural Consultant to monitor the tree protection measures on site. The purpose of this is to ensure the protection measures remain in situ and continue to provide sufficient protection to the trees.

This role will initially entail the Arboricultural Consultant liaising with the developer and Shropshire Council to ensure the recommended protection measures are suitably installed. Once the tree protection measures have been installed, and construction activity commences, the extent of any on-going site monitoring is at the discretion of Shropshire Council.

A formal record of these supervisory visits should be recorded and kept on file; a copy should also be circulated to all relevant parties, including Shropshire Council.

5.5.3 Key Contacts during Development

A list of key contacts relevant to this site that may be required throughout the duration of the development has been included in **Appendix 11**.

6 Conclusions

An initial tree survey undertaken by Ryan Lloyd of ADAS on Wednesday 2nd February 2022 and a subsequent survey was undertaken on Thursday 26th May 2022 and collectively these identified a total of 63 tree features which have the potential to be impacted by the development proposals, comprising 39 individual trees, 15 groups of trees eight hedgerows and one woodland on the site known as Land South of Berrington, Shrewsbury, Shropshire, SY5 6HA.

Of the 63 tree features on site at the time of the survey, a 15 metre section of G50 and 10 metre section of H24 will require removal in order to facilitate the proposed vehicular accesses. Both features were categorised as a low C grade and as such it is not anticipated that their loss should pose a constraint to development. Their loss can be easily compensated for and it anticipated that planting of this type will be included within the site landscaping scheme.

There were 11 veteran trees surveyed either on or within 15m of the site and their RPA's will be sufficiently protected through the installation of robust tree protection barriers and new, permanent site fencing. Their RPA's were calculated at 15 x DBH, rather than the standard 12 x DBH in order to afford the trees further protection and every effort was made to ensure a design which is both appropriate and proportionate could be achieved with the primary objective of preserving and maintaining all veteran trees as these are irreplaceable features which provide significant arboricultural and ecological contributions.

The security fencing shown on the proposal plan (Drawing Ref: External_R2_Typ-2_Berrington Solar Project_Turning angle_55 Deg_Pitch_4.88m_R-R_2.5m_Capacity_28.254MWp) must be erected prior to any commencement of construction works due to its important role in acting as tree protection fencing.

ADAS are satisfied that, providing the recommendations contained within this report are followed, the proposed development of the site can be successfully achieved without causing undue harm to trees identified for retention and the proposed tree losses are not expected to have a significant negative impact on the treescape of the area.

Appendix 1: Site Location Plan

See following page.

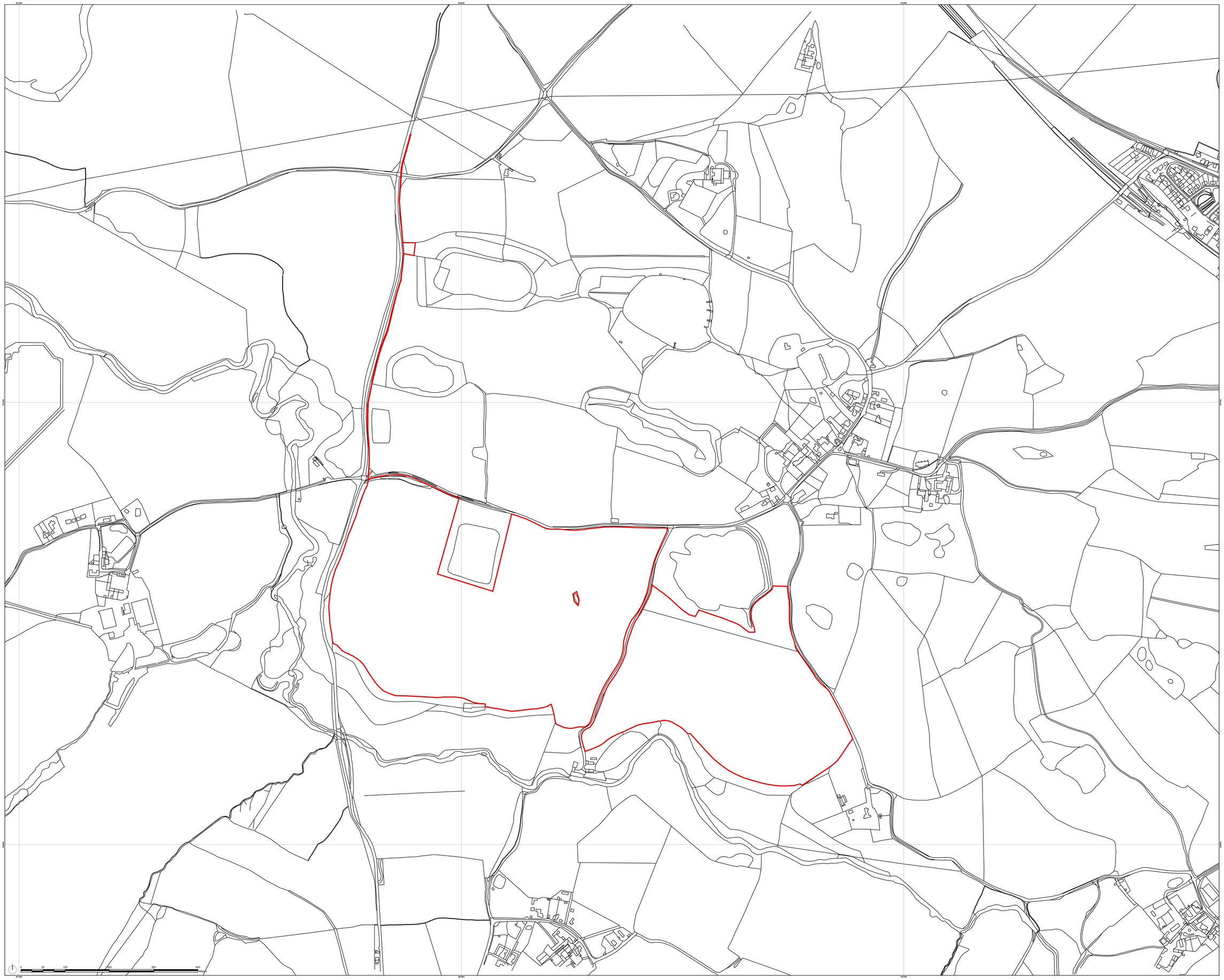

LEGEND

Site boundary

Issue	Issue Details	Date
04	Boundary Amendments	25/07/2022
03	Boundary Amendments	01/07/2022
02	Boundary Amendments	08/03/2022
01		02/12/2021

Client:

Econergy International LTD

Project:

Berrington Solar Farm

Drawing Title:

Site Location Plan

Drawing No: 1051487-ADAS-XX-XX-DR-P-8006

Scale: 1:2,500 at A0

Drawn by: IH Date: 02/12/2021

Checked by: DH Date: 02/12/2021

© Crown copyright and database rights (2021) OS 0100058606
For reference purposes only. No further copies may be made

ADAS, 11d Park House, Milton Park,
Milton, Abingdon, Oxford, OX14 4RS
Tel: 01235 315630

© RSK ADAS LTD

Appendix 2: Cascade Chart for Tree Quality Assessment

See following page.

Licensed copy, Individual user, Company, Version correct as of 11.04.2012, (c) The British Standards Institution 2012

Table 1 **Cascade chart for tree quality assessment**

Category and definition	Criteria (including subcategories where appropriate)			Identification on plan
Trees unsuitable for retention (see Note)				
Category U Those in such a condition that they cannot realistically be retained as living trees in the context of the current land use for longer than 10 years	• Trees that have a serious, irremediable, structural defect, such that their early loss is expected due to collapse, including those that will become unviable after removal of other category U trees (e.g. where, for whatever reason, the loss of companion shelter cannot be mitigated by pruning) • Trees that are dead or are showing signs of significant, immediate, and irreversible overall decline • Trees infected with pathogens of significance to the health and/or safety of other trees nearby, or very low quality trees suppressing adjacent trees of better quality *NOTE Category U trees can have existing or potential conservation value which it might be desirable to preserve; see **4.5.7**.*			See Table 2
	1 Mainly arboricultural qualities	**2 Mainly landscape qualities**	**3 Mainly cultural values, including conservation**	
Trees to be considered for retention				
Category A **Trees of high quality** with an estimated remaining life expectancy of at least 40 years	Trees that are particularly good examples of their species, especially if rare or unusual; or those that are essential components of groups or formal or semi-formal arboricultural features (e.g. the dominant and/or principal trees within an avenue)	Trees, groups or woodlands of particular visual importance as arboricultural and/or landscape features	Trees, groups or woodlands of significant conservation, historical, commemorative or other value (e.g. veteran trees or wood-pasture)	See Table 2
Category B **Trees of moderate quality** with an estimated remaining life expectancy of at least 20 years	Trees that might be included in category A, but are downgraded because of impaired condition (e.g. presence of significant though remediable defects, including unsympathetic past management and storm damage), such that they are unlikely to be suitable for retention for beyond 40 years; or trees lacking the special quality necessary to merit the category A designation	Trees present in numbers, usually growing as groups or woodlands, such that they attract a higher collective rating than they might as individuals; or trees occurring as collectives but situated so as to make little visual contribution to the wider locality	Trees with material conservation or other cultural value	See Table 2
Category C **Trees of low quality** with an estimated remaining life expectancy of at least 10 years, or young trees with a stem diameter below 150 mm	Unremarkable trees of very limited merit or such impaired condition that they do not qualify in higher categories	Trees present in groups or woodlands, but without this conferring on them significantly greater collective landscape value; and/or trees offering low or only temporary/transient landscape benefits	Trees with no material conservation or other cultural value	See Table 2

Appendix 3: Tree Survey Schedule

See following page.

Tree Ref No.	Species	Single or Multiple Stem (S or M)	Height (m)	Stem Diameter (mm) S1	S2	S3	S4	S5	Very Large Girth (Y / N)	Ancient, Veteran or Notable (A, V or N)	Branch Spread (m) N	E	S	W	Crown Clearance (m) (1)	(2)	Life Stage	General Observations (structural / physiological condition)	Preliminary Management Recommendations	Estimated Remaining Contribution (years)	Tree Quality Grading	Root Protection Area (m^2)	(radius in m)
T1	Field Maple	S	11	420							4	3	4	4	2.0-E	2	M	Tree growing on raised highway verge. No major defects observed.	None	20+	B2	79.8	5.0
T2	Field Maple	M(a)	11	340	370						4.5	6	5.5	6	1.5-W	1	M	Multi-stemmed from base. Tree growing on raised highway verge, with exposed roots to north.	None	20+	B2	114.2	6.0
T3	Ash	M(a)	16	390	250	240	180				6	6	6	6	3.0-E	3.5	M	Multi-stemmed tree growing on raised highway verge. Some exposed rooting to north.	None	20+	B2	137.8	6.6
T4	Goat Willow	M(b)	9	210							5	5	5	5	1.5-W	0.5	EM	Congested multi-stemmed tree. Typical for species. On raised highway verge. Tree overhangs site by approx 1.5m. 12 stems.	None	10+	C2	20.0	2.5
G5	Hazel	M(b)	6.5	*80*							3.5	3.5	3.5	3.5	0.5-W	0	SM	Three trees with approx 15 stems each. On raised highway verge and overhang site by approx 1.5m.	None	20+	C2	20.1	2.5
T6	English Oak	S	15	*1020*					Y	V	8	7.5	7	6.5	2.0-S	2.5	V	Standalone tree within agricultural field. Evidence of previous limb snap outs and moderate deadwood throughout crown. Erosion at base of stem. Epicormic growth below 4m. Tree is retrenching	None	40+	A2	470.7	12.2
T7	English Oak	S	12	*950*					Y	V	5	6	5.5	5	3.0-S	1.5	V	Standalone tree within agricultural field. Significant limb failures to top of crown, with moderate deadwood throughout. Epicormic growth below 5m. Tree is retrenching.	None	40+	A2	408.3	11.4
T8	English Oak	S	19	*1290*					Y		11	11	11	11	4.0-W	4.5	OM	Tree on boundary line next to access gates and unmade track. Excellent form and vigour for age, with minimal moderate deadwood noted.	None	40+	A1	707.0	15.0
G9	Holly	S	8	*220*							3.5	2.5	2.5	2.5	0-N	0	SM	Five trees grown out from boundary hedge.	None	20+	C2	21.9	2.6
H10	Mixed Broadleaves	S	2	*90*							1	1	1	1	0-N	0	SM	Maintained boundary hedgerow. Occassional outgrown specimen to 4m.	None	20+	C2	3.7	1.1
T11	English Oak	S	13	*1000*					Y	V	4.5	5.5	7	4.5	6.0-E	3.5	V	Tree has evidence of multiple previous limb fractures and major deadwood throughout crown. Unoccluded wound at 8m 300 x 150mm on northern aspect. Small unidentified fungal bracket noted at 3m on western aspect.	None	40+	A2	452.4	12.0
T12	English Oak	S	12	*720*							6.5	6	8.5	4	4.0-W	0.5	OM	Stem approx 10% hollow at base on northern aspect. Multi-stemmed from 1.5m. Minor deadwood noted only.	None	40+	B2	234.5	8.6
G13	White Willow	S	7	*120*							2.5	2.5	2.5	2.5	0.5-N	0.5	SM	Dense group of approx 15 trees surrounding depression.	None	20+	C2	6.5	1.4

Tree Ref No.	Species	Single or Multiple Stem (S or M)	Height (m)	Stem Diameter (mm) S1	S2	S3	S4	S5	Very Large Girth (Y / N)	Ancient, Veteran or Notable (A, V or N)	Branch Spread (m) N	E	S	W	Crown Clearance (m) (1)	(2)	Life Stage	General Observations (structural / physiological condition)	Preliminary Management Recommendations	Estimated Remaining Contribution (years)	Tree Quality Grading	Root Protection Area (m^2)	(radius in m)
T14	Ash	S	10	*460*							4	6	6	4	2.0-E	1	EM	Tree growing on edge of depression. Crown showing good vigour. Fused lims at 3.5m to the east.	None	20+	B2	95.7	5.5
T15	Field Maple	S	10	*330*							5.5	5.5	5.5	2	2.0-N	2.5	EM	Tree growing on verge within hedgerow. Minor damage to base of stem consistent with vehicles.	None	20+	B2	49.3	4.0
T16	Ash	S	10	*290*							4.5	2	2	3.5	4.0-N	3	SM	Tree growing within hedgerow and has ivy coveree stem to 2m. Next to telegraph pole with wires within crown.	None	20+	C2	38.1	3.5
T17	English Oak	S	8	*250*							3.5	3.5	3.5	3.5	2.5-S	3	SM	Tree growing within hedgerow. No major defects observed.	None	20+	C2	28.3	3.0
T18	English Oak	S	8	*280*							3.5	3.5	3.5	3.5	2.0-E	3	SM	Tree growing within hedgerow. No major defects observed. Ivy covered stem to 3m.	None	20+	C2	35.5	3.4
T19	Lime sp.	S	8.5	*300*							4	3	4	3.5	1.5-S	2.5	EM	Tree growing just outside hedgerow. Ivy covered stem to 2.5m. No major defects observed.	None	20+	C2	40.7	3.6
T20	English Oak	S	15	*1150*					Y	V	8.5	4	6	7.5	2.0-S	2	V	DBH estimated due to dense ivy cover upto 8m. Large quantity of moderate and some major deadwood. Tree is retrenching. Pruned to east due to overhead cables running alongside. Tree within boundary hedgerow. Some bark loss noted.	None	40+	A2	598.4	13.8
T21	English Oak	S	9	*420*							5	5	5	5	2.0-N	2	EM	Growing within hedgerow. No major defects observed.	None	40+	B2	79.8	5.0
T22	English Oak	S	11	*1030*					Y	V	4.5	3.5	5	4.5	4.5-N	2	V	Tree has undergone an extensive crown reduction, wounds suggest within the last five years. Pruning wounds remain unoccluded and are approx 200 x 200mm throughout crown. Tree growing in hedgerow with ivy to 7m.	None	40+	B2	480.0	12.4
T23	English Oak	S	10	*430*							6	6	5.5	5.5	2.0-S	2.5	EM	Tree growing within hedgerow with ivy upto 4m. No major defects observed.	None	40+	B2	83.7	5.2
H24	Mixed Broadleaves	S	4	*110*							1	1	1	1	0.5-N	0	SM	Maintained on east and west side, but has been allowed to grow higher than other hedges. Occassional outgrown trees.	None	20+	C2	5.5	1.3
T25	English Oak	S	10	*440*							4.5	4.5	4.5	4.5	2.5-S	2	EM	Within hedgerow. Next to telegraph pole and wire runs through crown. Tree has poor form.	None	10+	C2	87.6	5.3
H26	Mixed Broadleaves	S	2	*75*							0.5	0.5	0.5	0.5	0-N	0	SM	Maintained boundary hedgerow.	None	20+	C2	2.5	0.9
T27	European Larch	S	16	*450*							6	4	4.5	5.5	1.5-W	1.5	M	Tree situated just in adjacent property. Multi-leadered from 4.5m. Overhangs site by over 5m.	None	20+	B2	91.6	5.4
T28	English Oak	S	15	*1100*					Y	V	4.5	6.5	6.5	6.5	2.0-N	1	V	Tree has major deadwood within crown, indicating tree is retrenching. Multiple historic limb failures evident which have insufficient wound wood. Damage to base of tree consistent with animals.	None	40+	A2	547.5	13.2
G29	Mixed Broadleaves	S	15	*380*							5.5	5.5	5.5	5.5	1.0-N	1	EM	Species include Poplar sp, Beech, Sycamore, Norway Spruce, Common Oak. Trees straddling boundary of site and adjacent land. Overhanging site upto 6m in places. Approx 20 trees.	None	40+	B2	65.3	4.6
G30	Elm sp.	S	9	*220*							3	3	3	3	0.5-N	0.5	SM	Two dead trees. Unable to determine boundary at this point but assumed to be within site.	None	<10	U	21.9	2.6

Tree Ref No.	Species	Single or Multiple Stem (S or M)	Height (m)	Stem Diameter (mm) S1	S2	S3	S4	S5	Very Large Girth (Y / N)	Ancient, Veteran or Notable (A, V or N)	Branch Spread (m) N	E	S	W	Crown Clearance (m) (1)	(2)	Life Stage	General Observations (structural / physiological condition)	Preliminary Management Recommendations	Estimated Remaining Contribution (years)	Tree Quality Grading	Root Protection Area (m^2)	(radius in m)
T31	Ash	S	18	*880*					Y	V	8.5	11	9	8	5.0-N	3.5	V	Tree not accessible due to steep embankment. Ivy covered stem to 9m. Tree has significant upright epicormic growth on all limbs, and previous limb fractures evident. Inonotus seen around base of tree. Unable to determine ownership.	None	40+	A2	350.4	10.6
H32	Mixed Broadleaves	S	3.5	*75*							1.5	1.5	1.5	1.5	0-N	0	SM	Recently planted hedgerow which hasnt been maintained.	None	20+	C2	2.5	0.9
T33	English Oak	S	12	*870*							5	5	5	5	3.0-W	3	OM	400 x 250 mm hole at the base of tree to west. Multiple previous limb fractures throughout. Exposed roots to east suffered historic damage. Minor and moderate deadwood within crown.	None	20+	B2	342.5	10.4
T34	English Oak	S	18	*1510*					Y	N	6.5	8	8.5	8	4.5-N	3	OM	Tree becomes multi-stemmed at 2.5m. Minor and moderate deadwood throughout. Tree has good form.	None	40+	A2	707.0	15.0
T35	Ash	S	17	*920*					Y	N	6.5	6.5	6.5	6.5	4.5-N	3.5	OM	Tree was not accessible due to dense shrub. Ivy on main stem and primary limbs. Minor and moderate deadwood noted in crown. Two open decay wounds noted at approx 6m.	None	40+	A2	383.0	11.0
T36	Ash	S	15	*660*							6	6	6	6	4.0-W	6	M	No access to tree due to dense shrub. Lever arm to west at 4m. Decay wound at 4m to east.	None	40+	B2	197.1	7.9
T37	Ash	S	15	*670*							7	5.5	5.5	5	3.0-N	2.5	M	Not accessible due to ditch. Stem and crown ivy covered.	None	40+	B2	203.1	8.0
G38	Mixed Broadleaves	S	7	*130*							2.5	2.5	2.5	2.5	0-N	0	SM	Understorey group/boundary planting.	None	10+	C2	7.6	1.6
T39	English Oak	S	13	*1020*					Y	N	7.5	7.5	7.5	7.5	3.0-N	3.5	M	Tree has limited deadwood within crown.	None	40+	A2	470.7	12.2
H40	Mixed Broadleaves	S	2	*75*							0.5	0.5	0.5	0.5	0-N	0	SM	Maintained boundary hedgerow.	None	20+	C2	2.5	0.9
G41	English Oak and Ash	S	6	*200*							2	2	2	2	1.5-N	2	SM	Three Oak, one Ash outgrown from hedgerow.	None	20+	C2	18.1	2.4
T42	English Oak	S	16	*1250*					Y	V	7	4	7	7	4.5-E	2	V	Tree growing on raised verge, with exposed roots to west. Overhangs site by 3m. Ivy on main stem upto 6m. Moderate and major deadwood noted throughout crown, consistent with retrenchment.	None	40+	A2	707.0	15.0
T43	English Oak	S	15	*1020*					Y	V	7.5	8.5	7	7	3.0-W	2	V	Tree has minor and some moderate deadwood within crown. At least four previous failure points now decaying into stem at 3m and 4.5m. Very prominent landscape feature.	None	40+	A1	470.7	12.2
T44	English Oak	S	16	*1140*					Y	V	6.5	6.5	4	6	2.5-E	0.5	V	Tree in adjacent land but overhangs site by 3m. Minor and moderate deadwood noted throughout. One recent snap out leaving 700 x 300mm of heartwood exposed at 7m. One 400mm limb has partially fractured at 8m but is still within crown.	None	40+	A1	588.0	13.7
G45	Mixed Broadleaves	S	6	*130*							2.5	2.5	2.5	2.5	0-N	0	SM	Predominantly Hazel and Hawthorn. Group straddlesboundary. Sporadic in places.	None	20+	C2	7.6	1.6
G46	Ash	S	13	*400*							5	5	5	5	6.0-N	4.5	EM	Two trees 7m apart. Both have good form and vigour. Unable to determine ownership due to lack of boundary treatment.	None	40+	B2	72.4	4.8

Tree Ref No.	Species	Single or Multiple Stem (S or M)	Height (m)	Stem Diameter (mm) S1	S2	S3	S4	S5	Very Large Girth (Y / N)	Ancient, Veteran or Notable (A, V or N)	Branch Spread (m) N	E	S	W	Crown Clearance (m) (1)	(2)	Life Stage	General Observations (structural / physiological condition)	Preliminary Management Recommendations	Estimated Remaining Contribution (years)	Tree Quality Grading	Root Protection Area (m^2)	(radius in m)
T47	Field Maple	M(a)	12	370	380						4	4	4	4	1.0-N	0.5	M	Multi-stemmed from base. Good form and vigour. Unable to determine ownership due to lack of boundary treatmemt.	None	40+	B2	127.3	6.4
T48	Ash	M(a)	13	380	400						6	7.5	6	7.5	3.5-N	3.5	M	In fenced off area so no access to tree. Overhangs site by approx 4m. Multi-stemmed from base with stems fusing at 1m and again at 2m. Generally of poor form.	None	20+	C2	137.7	6.6
W49	Mixed Broadleaves and Conifer	S	13	250							3	3	3	3	1.0-N	2	EM	Planted woodland on steep embankment. Boundary not always visible.	None	40+	B1	28.3	3.0
G50	Mixed Broadleaves	S	9	150							2.5	2.5	2.5	2.5	0-N	0	SM	Planting alongside boundary fence and throughout roadside verge.	None	20+	C2	10.2	1.8
G51	Mixed Broadleaves	S	6	110							1.5	1.5	1.5	1.5	0-N	0	SM	Planting alongside boundary fence in verge.	None	20+	C2	5.5	1.3
T52	English Oak	S	15	1060					Y	V	7	6.5	7	7	5.0-E	4	V	Eastern most stem is approx 80% dead, with deadwood overhanging site by approx 1.5m. Tree ivy covered throughout with moderate and major deadwood, as well as multiple previous limb failures. Growing on verge.	None	40+	A2	508.4	12.7
G53	Hawthorn	S	5	100							2	2	2	2	0-N	0.5	SM	Either side of access into adjacent field.	None	10+	C2	4.5	1.2
H54	Mixed Broadleaves	S	2	80							0.5	0.5	0.5	0.5	0-N	0	SM	Maintained hedgerow.	None	20+	C2	2.9	1.0
G55	Ash and Field Maple	S	7	120							1	1	1	1	1.0-N	1	SM	Outgrown trees within H54. Approx. 40 trees.	None	20+	C2	6.5	1.4
H56	Mixed Broadleaves	S	2	90							0.5	0.5	0.5	0.5	0-N	0	SM	Maintained hedgerow between two stock fences.	None	40+	C2	3.7	1.1
T57	Hawthorn	M(a)	7	250	110	120	110	110			3.5	3	3.5	2.5	1.5-S	1.5	M	Mature tree 2.5m from stock fencing. No access to base.	None	20+	C2	51.2	4.0
T58	Field Maple	M(a)	12	440	400	260	200	170			4	5.5	3.5	4.5	1.5-S	3	M	0.5m from stock fencing. No access to base.	None	40+	B2	221.7	8.4
G59	Hazel	M(a)	5	80	80	80	80				2	2	2	2	0-N	0.5	SM	Five tree behind stock fencing with no access.	None	40+	C2	11.6	1.9
T60	English Oak	S	4.5	110							1	2	1	2	2.0-E	2	Y	Planted tree within hedgerow.	None	40+	C2	5.5	1.3
H61	Mixed Broadleaves	S	2	90							0.5	0.5	0.5	0.5	0-N	0	SM	Maintained hedgerow between two stock fences.	None	40+	C2	3.7	1.1
G62	Holly	M(a)	8	100	110						2	2	2	2	0.5-E	0	SM	Approx four trees. No access due to vegetation.	None	20+	C2	10.0	1.8
T63	Hawthorn	S	5	220							2.5	2.5	1	1.5	2.0-E	2	EM	Growing within roadside hedgerow.	None	20+	C2	21.9	2.6

BS5837
Sheet 2 -
Recognition of Ancient, Veteran and Notable Trees - RAVEN

Tree No.	Step 2 -Additional Primary Features (y/n)				Step 3 - Secondary Features (y/n)									Step 4
	Extensive Decay, esp. brown rot or exposed heartwood	Extensive hollowing	Crown senescence	Retrenchment	Large quantity of deadwood, esp. large-sized	Major Storm Damage/ breakout wounds	Habitat Spaces: decay holes and/ or crevices/ branch splits sheltered from direct rainfall	Aerial rooting	Sap run/ slime flux	Water Pool	Bark loss inc. due to lightning strike	Fungi	Other epiphytic plants, inc. significant presence of lichens	Status (A, V, N)
T6				Y	Y	Y	Y							V
T7				Y	Y	Y	Y							V
T11				Y	Y	Y	Y					Y		V
T20				Y			Y				Y			V
T22				Y			Y							V
T28				Y	Y	Y	Y							V
T31				Y		Y						Y		V
T42				Y	Y									V
T43				Y	Y	Y	Y							V
T44				Y	Y	Y	Y							V
T52				Y	Y	Y								V
T34														N
T35														N
T39														N

Notes:

Step 1 - Size Assessment (on survey sheet): Very large girth for species (if not stop assessment here)

Step 2 - Additional Primary Features: At least one should be present or refer to Step 3

Step 3 - Secondary Features: If no additional Primary Feature is present, tree should have at least four Secondary Features

Step 4: Identification Guide:

Ancient (A) - Veteran tree with extremely large girth: age likely >50% of estimated species maximum (*e.g. pedunculate oak, 2m stem dia. average site: ca. 460 years old, ca. 50% of species max.*)

Veteran (V) - Very large girth for species and qualifies under either Step 2 or Step 3

Notable (N) - Very large girth for species but does not qualify under either Step 2 or Step 3

©Julian Forbes-Laird 2018 www.flac.uk.com

Surveyor: RL
Checked: IW

Appendix 4: Tree Constraints Plan

See following page.

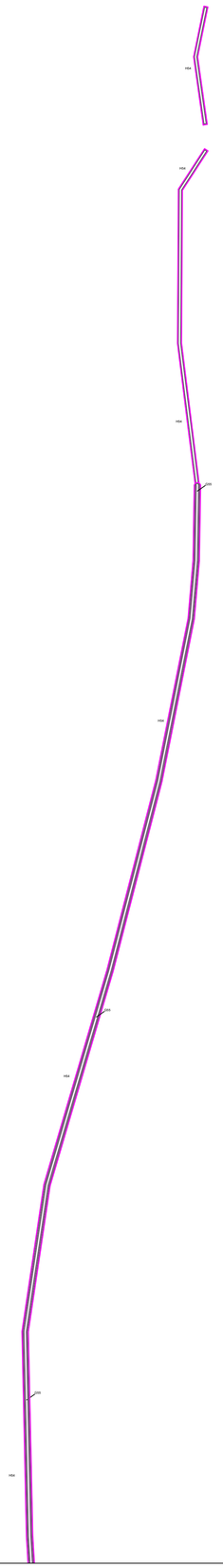

0 50m 1:1,250

LEGEND

TREE CATEGORIES - NOTE: Quality class description derived from BS5837:2012

Category A
Trees / Groups of high quality: with an estimated remaining life expectancy of at least 40 years.

Category B
Trees / Groups of moderate quality: with an estimated remaining life expectancy of at least 20 years.

Category C
Trees / Groups of low quality: with an estimated remaining life expectancy of at least 10 years, or young trees with a stem diameter below 150mm.

Category U
Trees / Groups: in such a condition that they cannot realistically be retained as living trees in the context of current land use for longer than 10 years.

Root Protection Area (RPA)

SHEET LOCATION PLAN

Not to scale

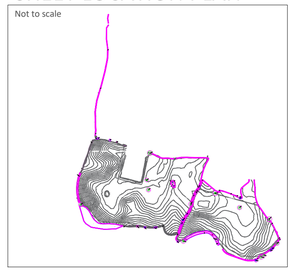

Rev.	Issue Details.	Date.
A	H56-T63 Added	30th May 2022
-	First Issue	3rd March 2022

Client:
Econergy International Ltd

Project:
Solar Farm on Land South of Berrington

Drawing Title:
Tree Constraints Plan

Drawing No: 1051610_ECONERGY_TCP_SHEET1

Scale: 1:1250 @ A1

Drawn by: RL Date: 03/03/22

Checked by: IW Date: 04/03/22

© Crown copyright and database rights (2022) OS 0100019694
For reference purposes only. No further copies may be made.

ADAS, 11d Park House, Milton Park,
Milton, Abingdon, Oxford, OX14 4RS

Tel: 01235 355630

©RSK ADAS Ltd.

G:\Econergy International LTD\Berrington Site - Shropshire\Drawings\Site - Additional Survey Area\DWG_1051610_Berrington_TCP_May-2022.dwg

LEGEND

TREE CATEGORIES - NOTE: Quality class description derived from BS5837:2012

Category A
Trees / Groups of high quality: with an estimated remaining life expectancy of at least 40 years.

Category B
Trees / Groups of moderate quality: with an estimated remaining life expectancy of at least 20 years.

Category C
Trees / Groups of low quality: with an estimated remaining life expectancy of at least 10 years, or young trees with a stem diameter below 150mm.

Category U
Trees / Groups: in such a condition that they cannot realistically be retained as living trees in the context of current land use for longer than 10 years.

Root Protection Area (RPA)

SHEET LOCATION PLAN

Not to scale

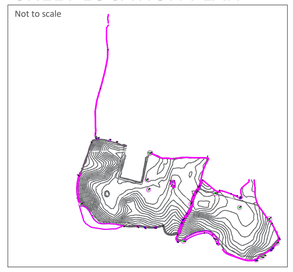

Rev.	Issue Details.	Date.
A	H56-T63 Added	30th May 2022
-	First Issue	3rd March 2022

Client:

Econergy International Ltd

Project:

Solar Farm on Land South of Berrington

Drawing Title:

Tree Constraints Plan

Drawing No: 1051610_ECONERGY_TCP_SHEET2

Scale: 1:1250 @ A1

Drawn by: RL Date: 03/03/22

Checked by: IW Date: 04/03/22

© Crown copyright and database rights (2022) OS 0100019694
For reference purposes only. No further copies may be made.

ADAS, 11d Park House, Milton Park,
Milton, Abingdon, Oxford, OX14 4RS

Tel: 01235 355630

©RSK ADAS Ltd.

LEGEND

TREE CATEGORIES - NOTE: Quality class description derived from BS5837:2012

Category A
Trees / Groups of high quality: with an estimated remaining life expectancy of at least 40 years.

Category B
Trees / Groups of moderate quality: with an estimated remaining life expectancy of at least 20 years.

Category C
Trees / Groups of low quality: with an estimated remaining life expectancy of at least 10 years, or young trees with a stem diameter below 150mm.

Category U
Trees / Groups: in such a condition that they cannot realistically be retained as living trees in the context of current land use for longer than 10 years.

Root Protection Area (RPA)

SHEET LOCATION PLAN

Not to scale

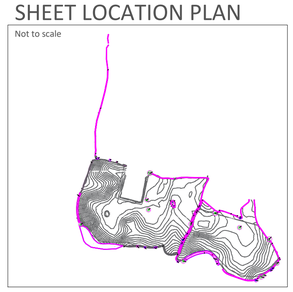

Rev.	Issue Details.	Date.
A	H56-T63 Added	30th May 2022
-	First Issue	3rd March 2022

Client:

Econergy International Ltd

Project:

Solar Farm on Land South of Berrington

Drawing Title:

Tree Constraints Plan

Drawing No: 1051610_ECONERGY_TCP_SHEET3

Scale: 1:1250 @ A1

Drawn by: RL Date: 03/03/22

Checked by: IW Date: 04/03/22

© Crown copyright and database rights (2022) OS 0100019694
For reference purposes only. No further copies may be made.

ADAS, 11d Park House, Milton Park,
Milton, Abingdon, Oxford, OX14 4RS

Tel: 01235 355630

©RSK ADAS Ltd.

V:\Econergy\1051610 - Econergy International LTD (Berrington Solar, Shropshire)\Drawing\Map - Additional Survey Area\ADAS_1051610_Berrington_TCP_May-2022.dwg

Appendix 5: Tree Protection Plan

See following page.

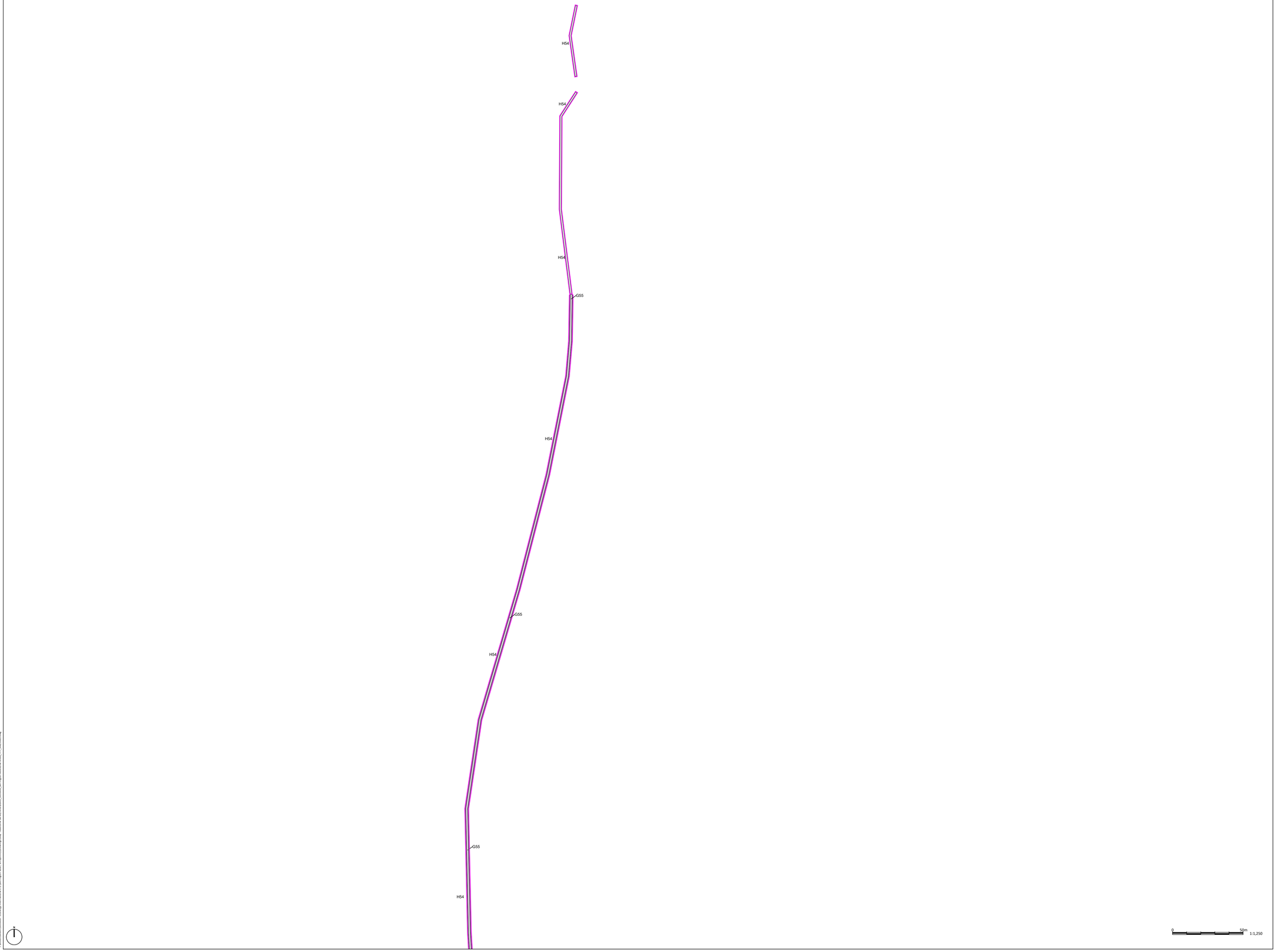

LEGEND

TREE CATEGORIES - NOTE: Quality class description derived from BS5837:2012

Category A
Trees / Groups of high quality: with an estimated remaining life expectancy of at least 40 years.

Category B
Trees / Groups of moderate quality: with an estimated remaining life expectancy of at least 20 years.

Category C
Trees / Groups of low quality: with an estimated remaining life expectancy of at least 10 years, or young trees with a stem diameter below 150mm.

Category U
Trees / Groups: in such a condition that they cannot realistically be retained as living trees in the context of current land use for longer than 10 years.

Root Protection Area (RPA)

Groups Requiring Partial Removal
Approximately 15 metres from the centre of G50 and 10 metres from H24.

Tree Protection Barriers
To be installed for the duration of construction and until site becomes operational, where retained trees RPA's fall within the site boundary, or within the site fencing.

SHEET LOCATION PLAN

Rev.	Issue Details.	Date.
B	H56-T63 Added	30th May 2022
A	Updated Layout Plan	17th May 2022
-	First Issue	3rd March 2022

Client:

Econergy International Ltd

Project:

Solar Farm on Land South of Berrington

Drawing Title:

Tree Protection Plan

Drawing No: 1051610_ECONERGY_TPP_SHEET1

Scale: 1:1250 @ A1

Drawn by: RL Date: 03/03/22

Checked by: IW Date: 04/03/22

© Crown copyright and database rights (2022) OS 0100019694
For reference purposes only. No further copies may be made.

ADAS, 11d Park House, Milton Park,
Milton, Abingdon, Oxford, OX14 4RS

Tel: 01235 355630

©RSK ADAS Ltd.

V:\Workarea\Work\105163 - Econergy International LTD Berrington Solar - Drawings\Drawings\Map - Additional Survey Area\FINAL_105163_Berrington Additional Area_TPP_May 2022.dwg

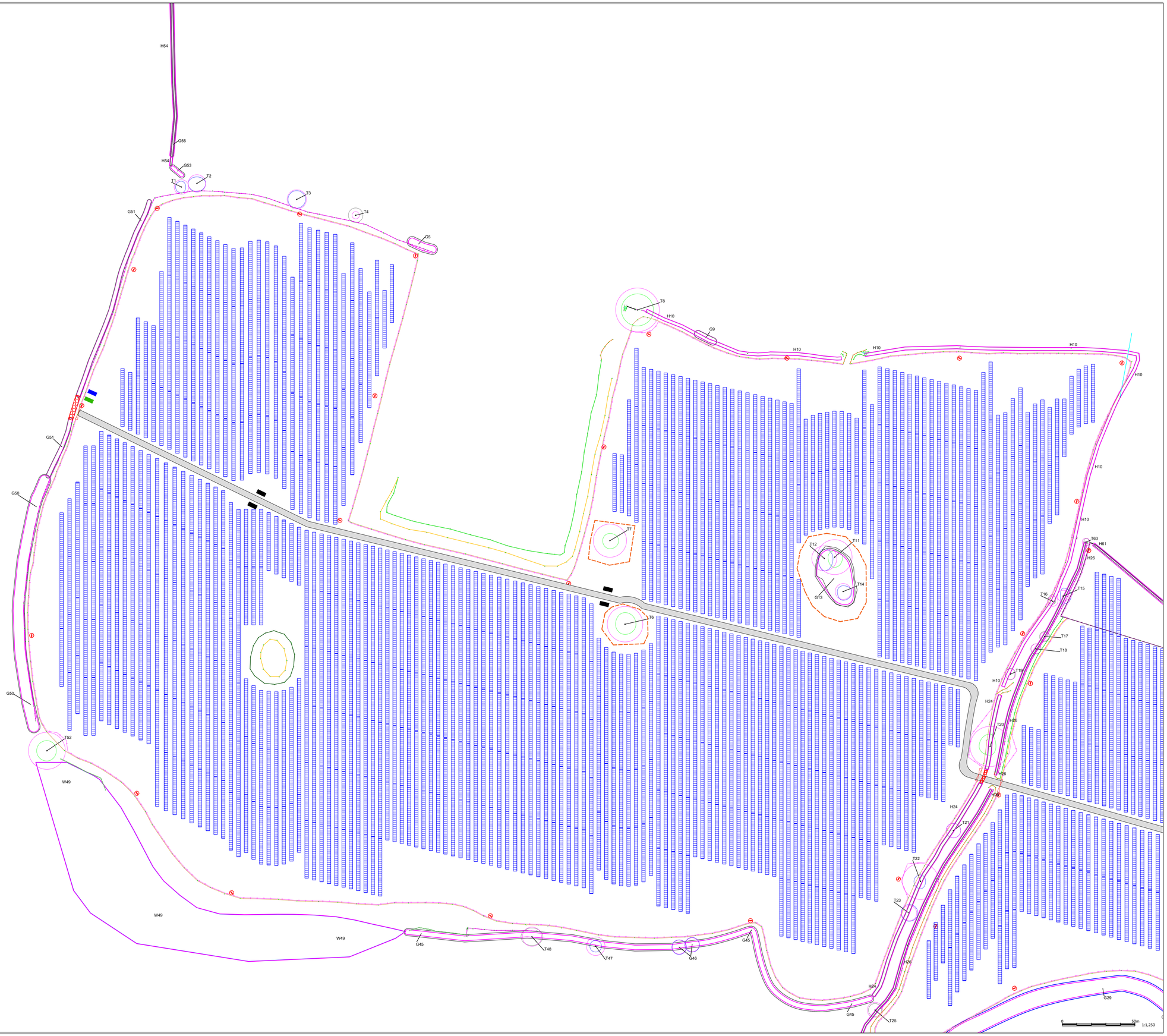

LEGEND

TREE CATEGORIES - NOTE: Quality class description derived from BS5837:2012

Category A
Trees / Groups of high quality: with an estimated remaining life expectancy of at least 40 years.

Category B
Trees / Groups of moderate quality: with an estimated remaining life expectancy of at least 20 years.

Category C
Trees / Groups of low quality: with an estimated remaining life expectancy of at least 10 years, or young trees with a stem diameter below 150mm.

Category U
Trees / Groups: in such a condition that they cannot realistically be retained as living trees in the context of current land use for longer than 10 years.

Root Protection Area (RPA)

Groups Requiring Partial Removal
Approximately 15 metres from the centre of G50 and 10 metres from H24.

Tree Protection Barriers
To be installed for the duration of construction and until site becomes operational, where retained trees RPA's fall within the site boundary, or within the site fencing.

SHEET LOCATION PLAN

Not to scale

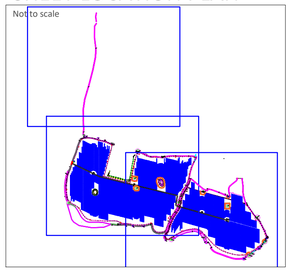

Rev.	Issue Details.	Date.
B	H56-T63 Added	30th May 2022
A	Updated Layout Plan	17th May 2022
-	First Issue	3rd March 2022

Client:
Econergy International Ltd

Project:
Solar Farm on Land South of Berrington

Drawing Title:
Tree Protection Plan

Drawing No: 1051610_ECONERGY_TPP_SHEET2

Scale: 1:1250 @ A1

Drawn by: RL Date: 03/03/22

Checked by: IW Date: 04/03/22

© Crown copyright and database rights (2022) OS 0100019694
For reference purposes only. No further copies may be made.

ADAS, 11d Park House, Milton Park,
Milton, Abingdon, Oxford, OX14 4RS

Tel: 01235 355630

©RSK ADAS Ltd.

Y:\Adas\Land\1051610 - Econergy International LTD\Berrington Solar, Worcester\Drawings\Map - Additional Survey Area\1051610_20220_Berrington Additional Area_TPP_May 2022.dwg

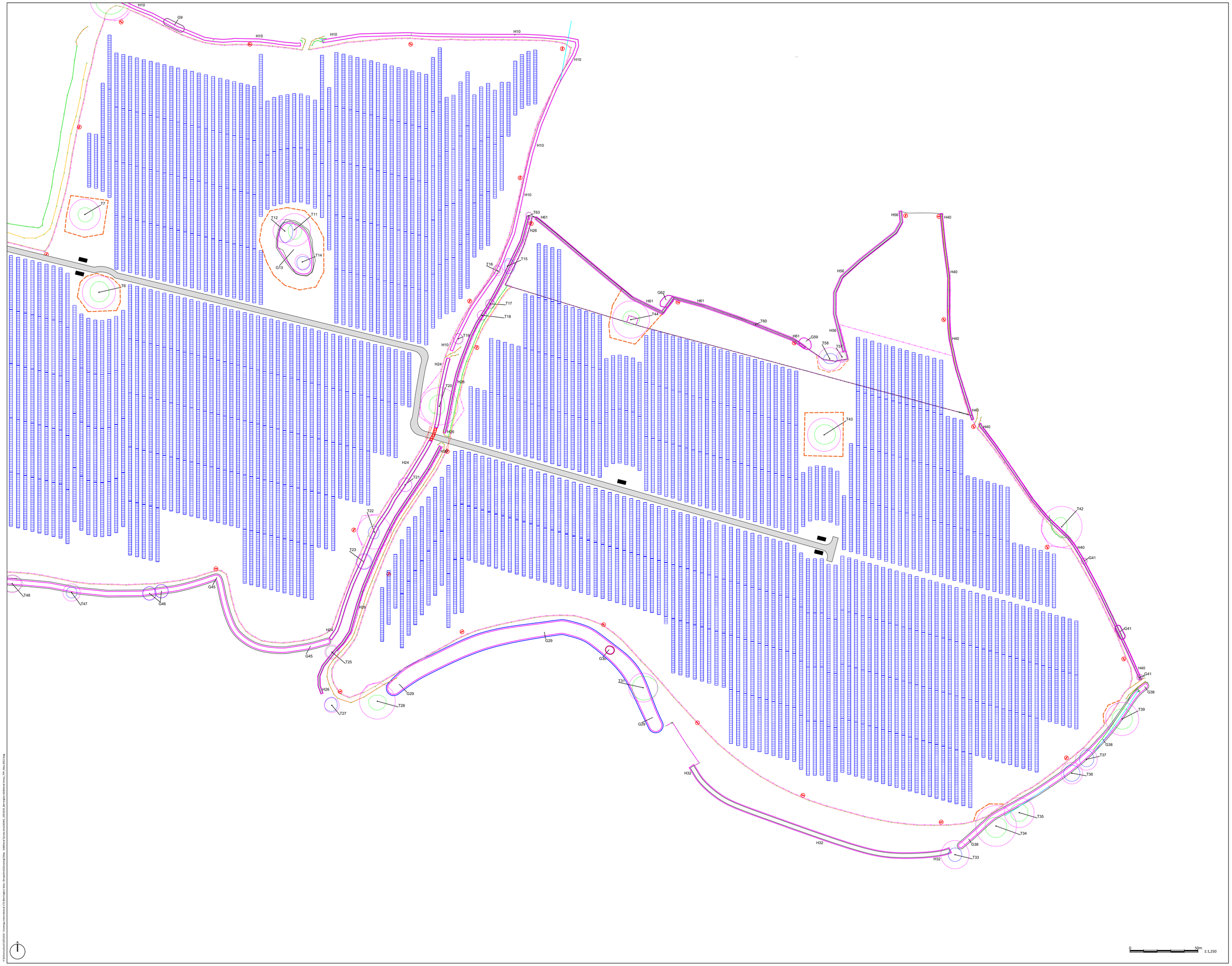

LEGEND

TREE CATEGORIES - NOTE: Quality class description derived from BS5837:2012

Category A
Trees / Groups of high quality: with an estimated remaining life expectancy of at least 40 years.

Category B
Trees / Groups of moderate quality: with an estimated remaining life expectancy of at least 20 years.

Category C
Trees / Groups of low quality: with an estimated remaining life expectancy of at least 10 years, or young trees with a stem diameter below 150mm.

Category U
Trees / Groups: in such a condition that they cannot realistically be retained as living trees in the context of current land use for longer than 10 years.

Root Protection Area (RPA)

Groups Requiring Partial Removal
Approximately 15 metres from the centre of G50 and 10 metres from H24.

Tree Protection Barriers
To be installed for the duration of construction and until site becomes operational, where retained trees RPA's fall within the site boundary, or within the site fencing.

SHEET LOCATION PLAN

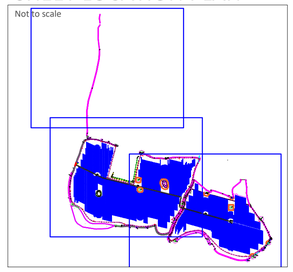

Rev.	Issue Details.	Date.
B	H56-T63 Added	30th May 2022
A	Updated Layout Plan	17th May 2022
-	First Issue	3rd March 2022

Client:
Econergy International Ltd

Project:
Solar Farm on Land South of Berrington

Drawing Title:
Tree Protection Plan

Drawing No: 1051610_ECONERGY_TPP_SHEET3

Scale: 1:1250 @ A1

Drawn by: RL Date: 03/03/22

Checked by: IW Date: 04/03/22

© Crown copyright and database rights (2022) OS 0100019694
For reference purposes only. No further copies may be made.

ADAS, 11d Park House, Milton Park,
Milton, Abingdon, Oxford, OX14 4RS

Tel: 01235 355630

©RSK ADAS Ltd.

0 50m 1:1,250

Appendix 6: Tree Work Schedule

Tree No:	Species	Recommended Management Work
H24	Mixed Broadleaves	Removal of approx. 10 metres required to facilitate access through the site.
G50	Mixed Broadleaves	Removal of approx. 15 metres to the centre of the group required to facilitate access into the site.

Accompanying Notes:

- All tree work and felling to be carried out in accordance with BS 3998 (2010) 'Recommendations for Tree Work', current industry guidelines and best practice, and all relevant Health & Safety standards;
- All operatives to be appropriately qualified, skilled, and adequately insured, for the task they are undertaking;
- All tree work and felling must comply with The Wildlife and Countryside Act 1981 as amended by the Countryside and Rights of Way Act 2000;
- Where sections of hedges and groups are to be removed reference is to be made to the Tree Protection Plans contained in **Appendix 5** for the exact locations.
- Modification to, or deviation from, the above schedule must first gain approval from Shropshire Council.

Appendix 7: RPA Guidance

The Root Protection Area (RPA) is calculated from the stem diameter of the tree, in accordance with the guidance contained in section 4.6 of BS 5837:2012.

These areas are normally sacrosanct, and should not be entered, by traffic or foot, during construction, or used to store materials, fuel or chemicals.

Protective fencing should be erected along the edge of the RPA, before construction begins, and should not be moved until after all construction has finished and vacated the site. The type of fencing used should be fit for purpose, and ordinarily conform to the recommendations given in section 6.2.2 of BS 5837:2012 and be erected similar to the example shown in Figure 2 of the same standard.

Where underground services cannot be routed outside the RPA, these should be installed by trenchless technology, such as a directional drill. Where this technology is used the underground channel created should be no less than 600mm below normal ground level, or the base of the tree. Also, the starting and receiving excavations should not be within the RPA. Drill channel lubricant should be avoided, other than water, unless precautions are taken to prevent contamination of soil and possibly water. Hand digging may be an alternative to trenchless excavation, but this is less desirable, and not always practical.

When determining the workable space around the RPA of a tree or trees, it is also important to maintain a working zone of one metre (which is usually sufficient) between the edge of construction and the protective fencing.

Appendix 8: Example Tree Protection Barrier

See following page.

Figure 3 Examples of above-ground stabilizing systems

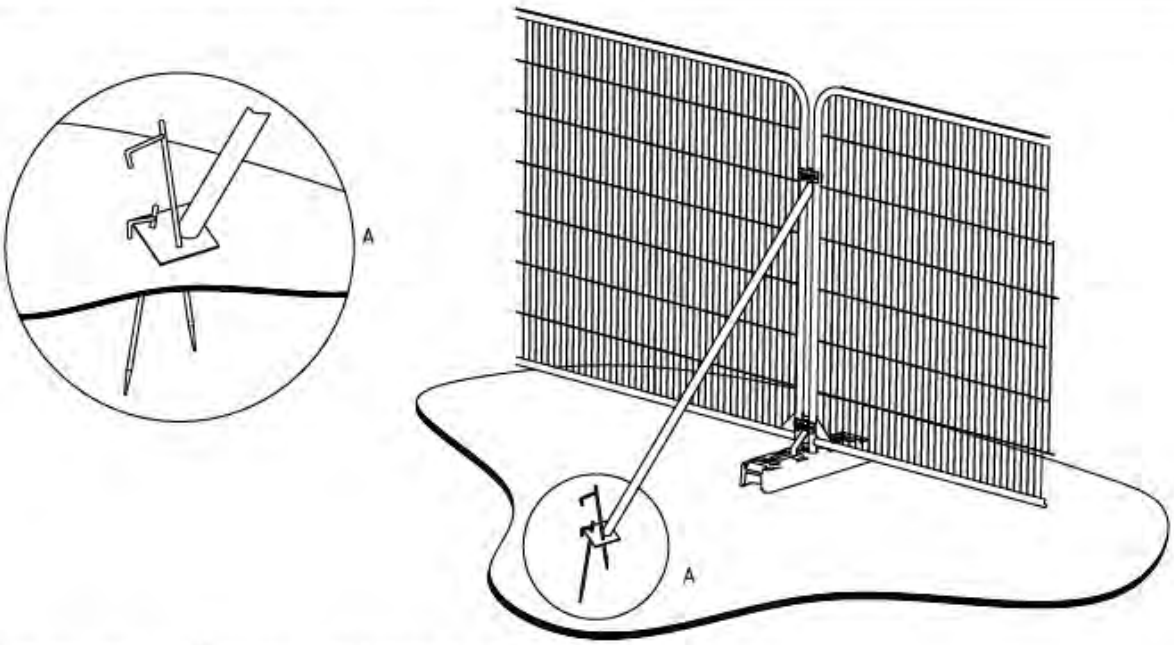

a) Stabilizer strut with base plate secured with ground pins

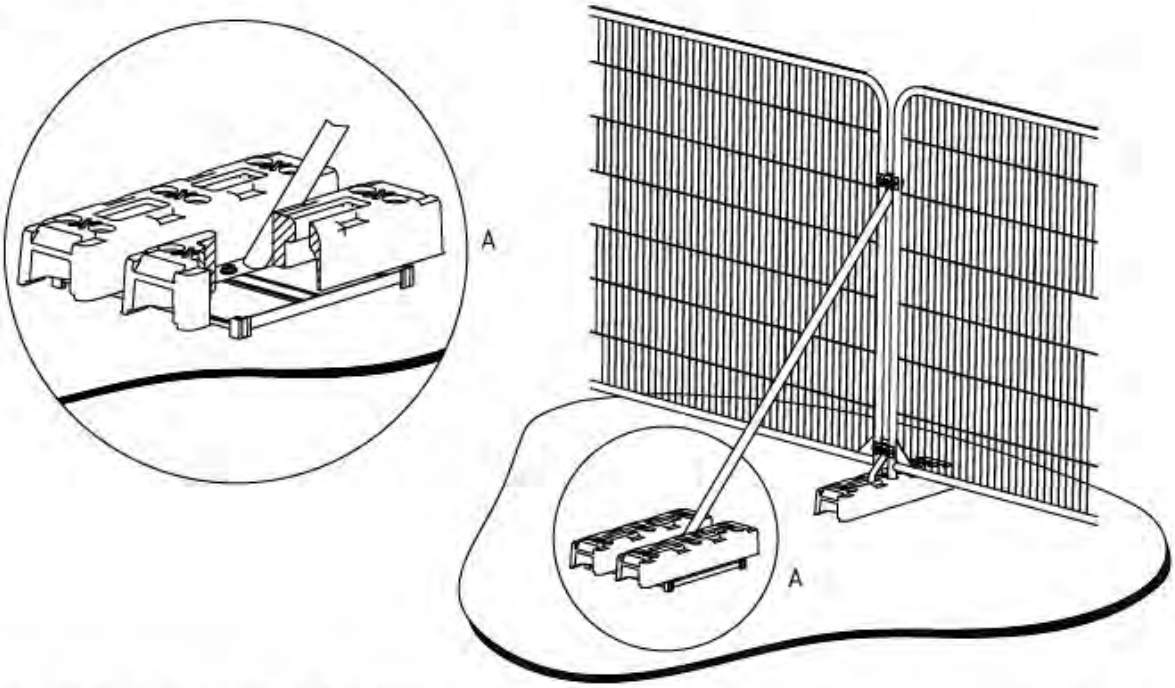

b) Stabilizer strut mounted on block tray

BSI British Standards Institution, Version correct at 11:06, 2012 (c) The British Standards Institution 2012

Appendix 9: Example Tree Protection Barrier Sign

Appendix 10: Key Sequence of Events after Planning Approval

Shropshire Council Approve Arboricultural Planning Statement

▼

Pre-commencement site meeting (if necessary)

▼

Tree Work Schedule implemented

▼

Security fence to act as Tree Protection Barriers, and other Tree Protection Barriers (TPB) constructed before main construction phase

▼

Arboricultural Consultant to inspect TPB, against approved plans, prior to construction contractors entering site

▼

Commencement of:

Demolition / Site Preparation / Construction

▼

Arboricultural Consultant to monitor site at Shropshire Council agreed schedule

▼

Remedial Tree Work (if necessary)

▼

Shropshire Council to approve additional Tree Work (if necessary)

▼

Hard & Soft Landscaping

▼

Arboricultural Consultant to monitor approved works within the TPB (where applicable)

▼

Tree Protection Barriers removed

▼

Tree Protection Barriers only to be removed after all site works have been completed

▼

Operational Site

Appendix 11: Contact Details

	Name	Main Contact and Details
Site Details	Solar Farm on Land South of Berrington	Berrington Shrewsbury Shropshire SY5 6HA
Developer	Econergy International Ltd	Churchill House 137 Brent Street London NW4 4DJ
Arboricultural Consultant	Ryan Lloyd	ADAS 11D Park House Milton Park Abingdon OX14 4RS Email: ryan.lloyd@adas.co.uk
Local Authority:	Shropshire Council	Planning Services – Tree Team PO Box 4826 Shrewsbury SY1 9LJ Email: trees@shropshire.gov.uk Tel: 01743 253333